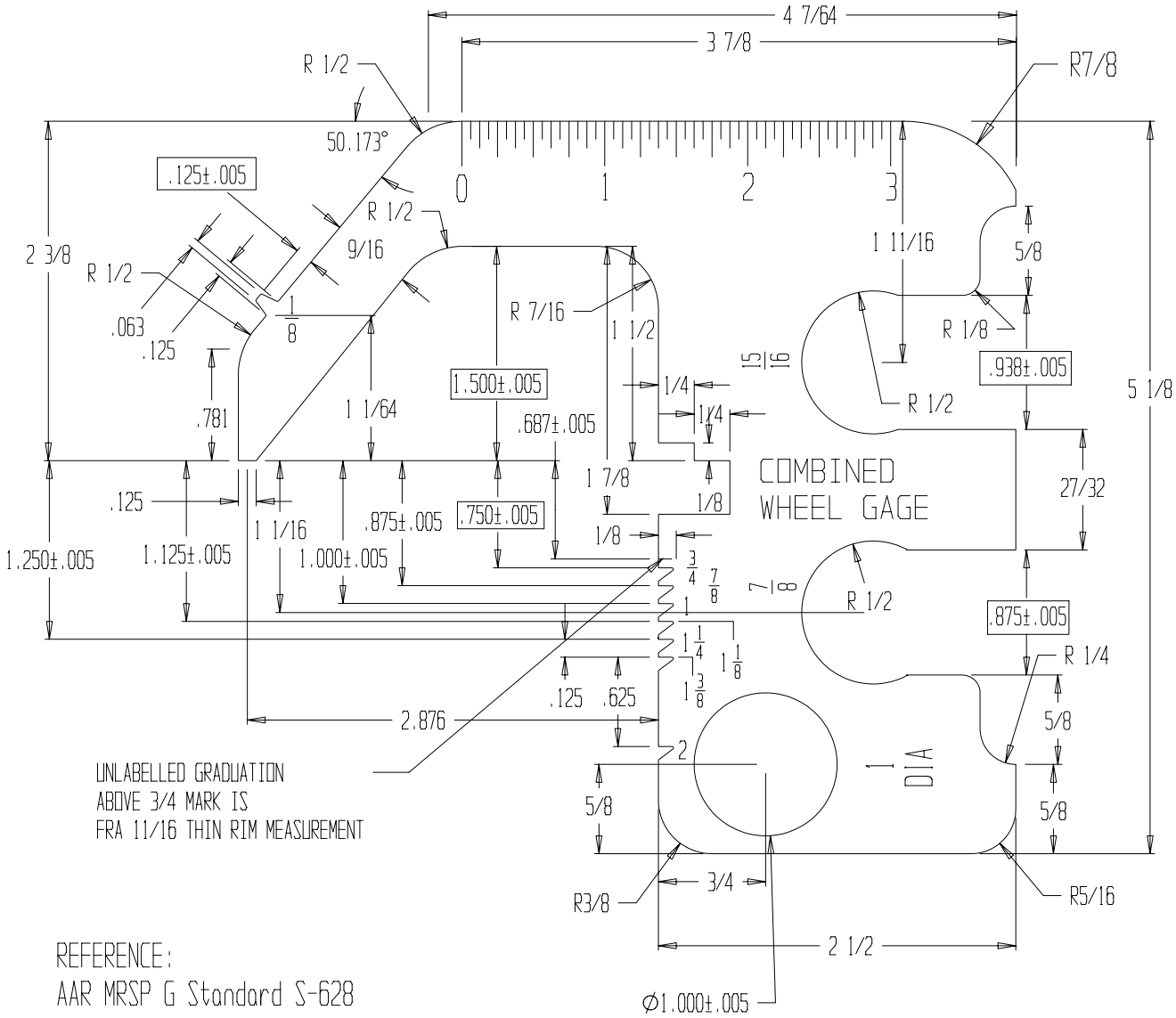

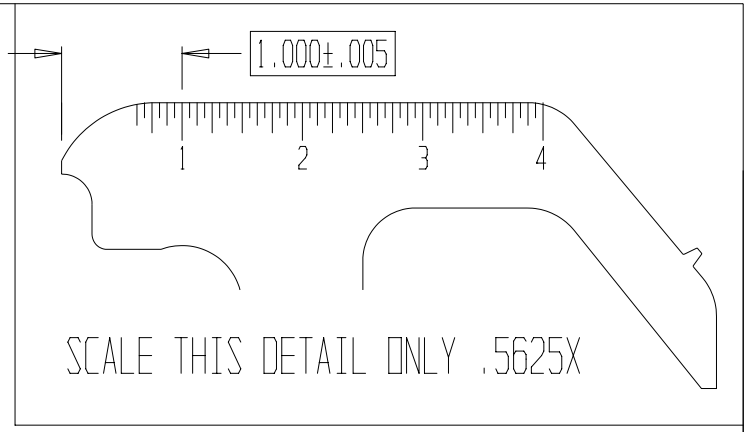

REFERENCE:
AAR MRSP G Standard S-628

BOXED DIMENSIONS ARE MINIMUM
CHARACTERISTICS TO BE VERIFIED
FOR RECERTIFICATION
RECERTIFICATION TOLERANCE +/- .015"

UNLESS OTHERWISE SPECIFIED
MANUFACTURE TOLERANCES: +/- .010

Material:
Stainless Steel 304
Thickness: 3/32

Scale: .75X

WINCHESTER INDUSTRIES INC.

COMBINED WHEEL GAGE

SIZE	Job#	DWG NO.	Disk	REV
A		W620-1P		E

CUSTOMER | ENG 5/31/2006