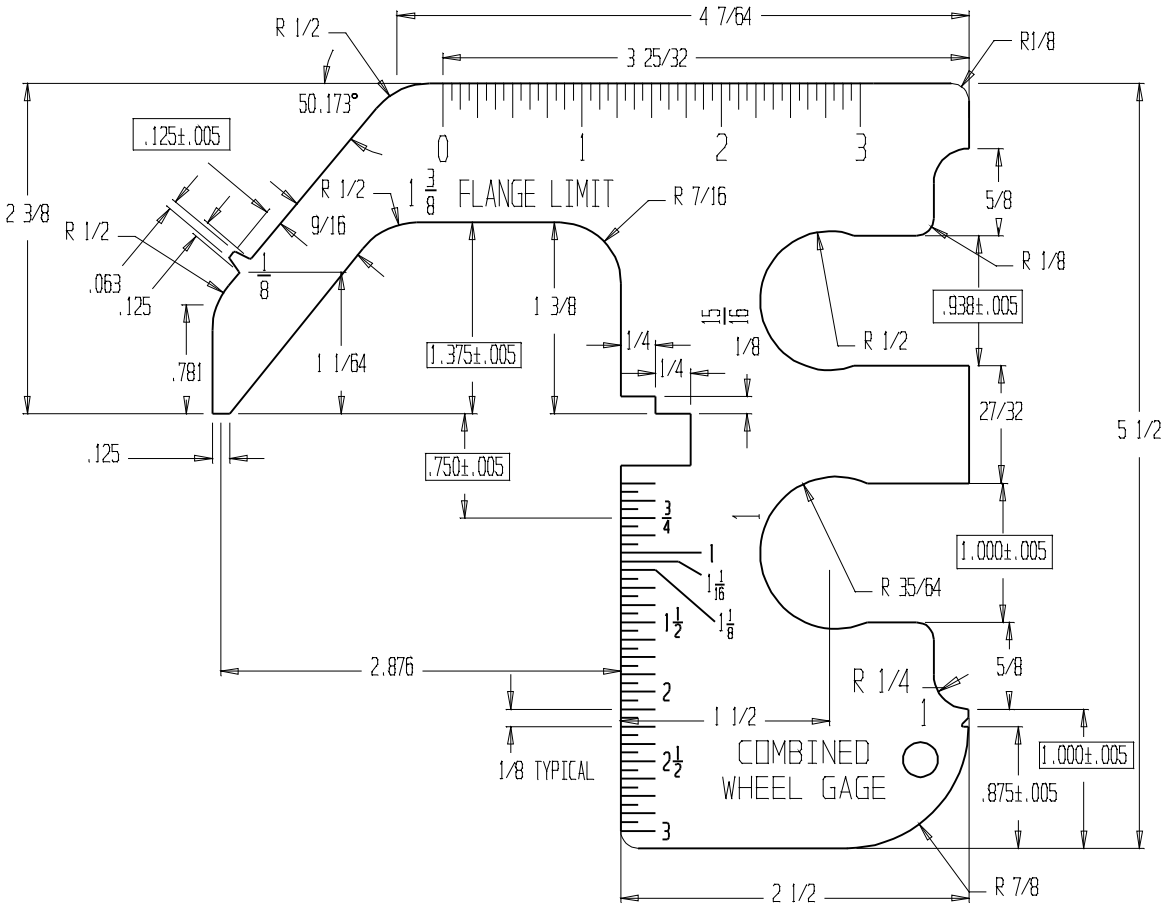

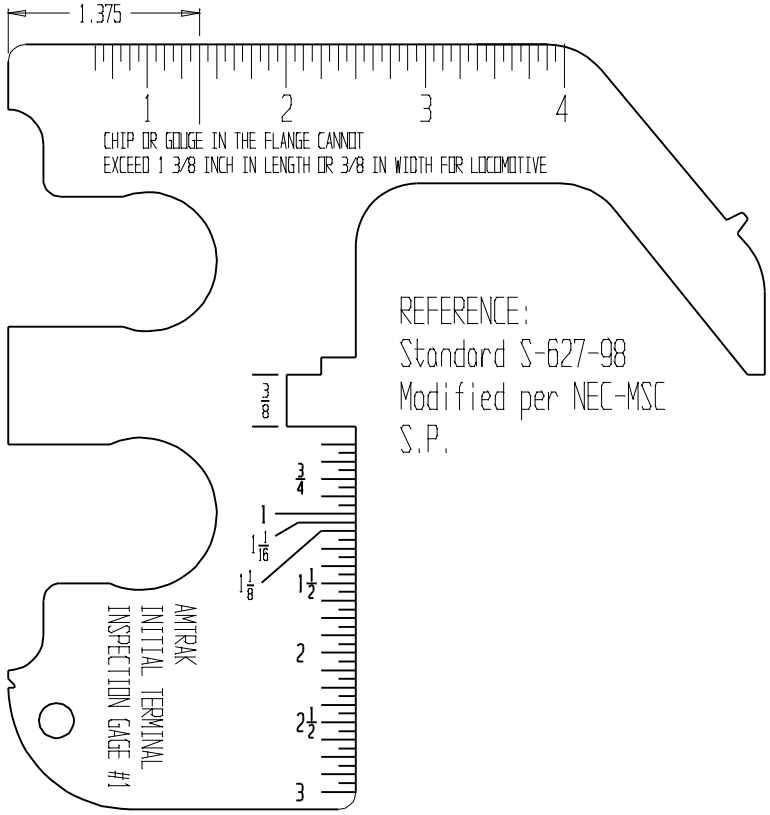

REFERENCE:
Standard S-627-98
Modified per NEC-MSC
S.P.

BOXED DIMENSIONS ARE MINIMUM
CHARACTERISTICS TO BE VERIFIED
FOR RECERTIFICATION
RECERTIFICATION TOLERANCE +/- .015"

UNLESS OTHERWISE SPECIFIED
MANUFACTURE TOLERANCES: +/- .010

Material:
Stainless Steel 304
Thickness: 3/32

Scale: .65X

WINCHESTER INDUSTRIES INC.

AMTRAK INITIAL TERMINAL INSPECTION GAGE #1

SIZE	Job#	DWG NO.	Disk	REV
A		W620-4		E

CUSTOMER AMTRAK | ENG JCD 02/22/2007